Core LED

MARTEC®

Core

A high extraction exhaust fan the Core 200mm/250mm delivers excellent air extraction with its turbo fan blade. A sleek modern design and long life ball bearing motor it is suitable for most areas of the home.

SAA

ENERGY EFFICIENT

3YEAR REPLACEMENT WARRANTY

MXFC20W (200mm)
MXFC25W (250mm)

FEATURES

- 3 year replacement warranty
- Excellent airflow 350 (MXFC20W) / 550
- (MXFC25W) m3 per hour
- Long life ball bearing motor
- Quiet operation
- Removable grill
- Turbo fan blade
- White finish

DIAGRAM

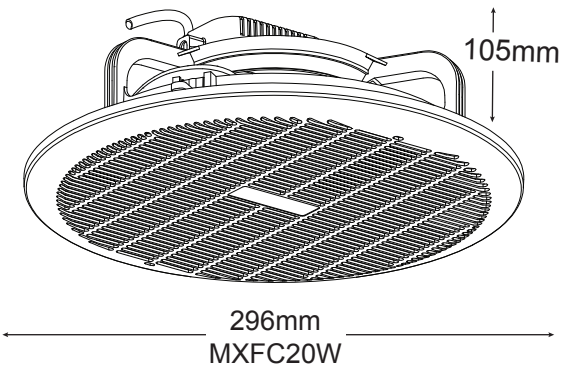

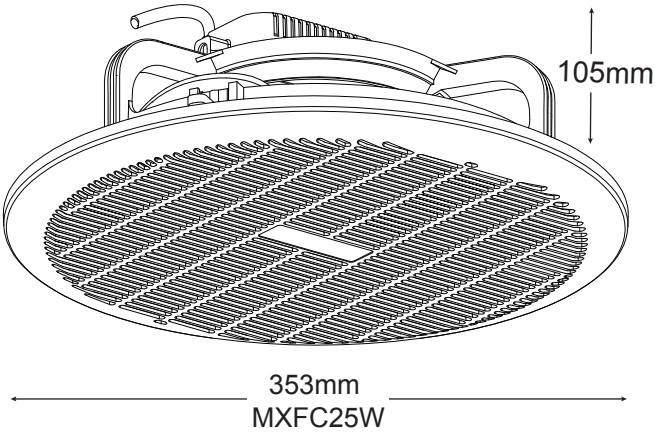

Certified System
Quality
ISO 9001
SAI GLOBAL

CUT OUT SIZE	245mm (MXFC20W) / 300mm (MXFC25W) Diameter
GRILL SIZE	296mm (MXFC20W) / 353mm (MXFC25W) Diameter
Minimum ceiling depth of 500mm is required for maximum performance	