Maxi Tivah Aluminium Black

Single Adjustable Spot Light

Name	Tivah
Material	Aluminium
Colour	Poly Powder Coated Black
IP Rating	IP65
Colour Temp	3000k 4000k 5500k
IK Rating	IK10
Installation Type	Wall - Surface Mounted
Diffuser Type	Clear Glass
Lamp Base	Built in LED
Max Wattage	1x 12w
Protection Class	1 (Requires Earth)
Lamp Expectancy	<30,000hrs*
CRI	CRI>80
SDCM	<6
UGR	<45
Dimmable	Yes - Triac Dimmable
Warranty	3 Years Replacement*

Dimensions

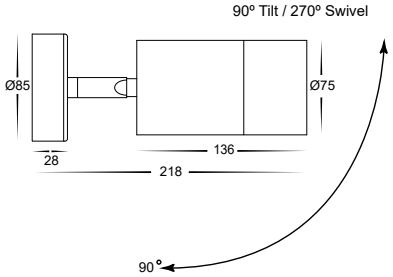

Mounting Base

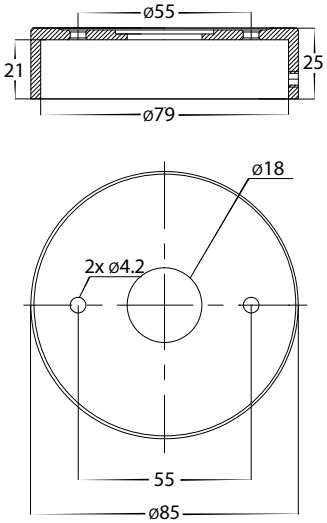

Warranty Terms & Conditions

Website

Optional Havit Compatible Accessories

Image	Part Number	Description
	Dimmer	
	HV9625	Triac Dimmer - Max 300w LED

Product Ordering

Image	Part Number	Colour Temp	Lumens	Input Voltage	Beam Angle	Included LED	Barcode
	HV1228T	3000K 4000K 5500K	1080lm 1140lm 1200lm	240v AC	60°	**TRI Colour** 12w Built in LED	9350418018915

Related Products

Up Down

Fixed Down

Havit Lighting 143 Beauchamp Road, Matraville, N.S.W. 2036 | Phone: 02 9381 8300 | Fax: 02 9381 6661 | Email: sales@havit.com.au | Web: www.havit.com.au

*See Warranty Terms & Conditions for more Information