BL-8072

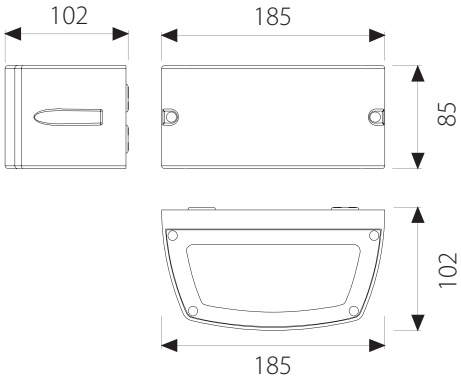

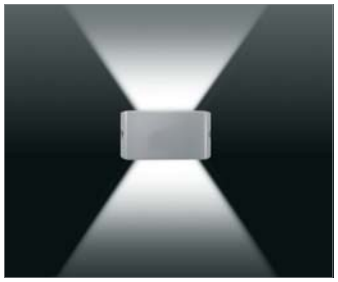

BL-8072.92X
Lamp: TC-D
Power: 13W
Base: G24 d-1

BL-8072.14X
Lamp: QT14
Power: 75W
Base: G9

BL-8072.76X
Lamp: QT-DE12
Power: 60W
Base: R7s-15

BL-8072.88X
Lamp: 2 LED
Power: 2 x 4.1W
LED: 2 x 230lm 6300K

- Outdoor direct light wall luminaire
- Painted die-cast aluminium body
- Tempered glass and/or lens diffuser
- Aluminium reflector
- Silicon gaskets
- Stainless steel screws
- Painting using high resistance to UV and corrosion polyester powders

Available Colours:

X=2 White
X=9 Anthracite
X=3 Black
X=4 Silver

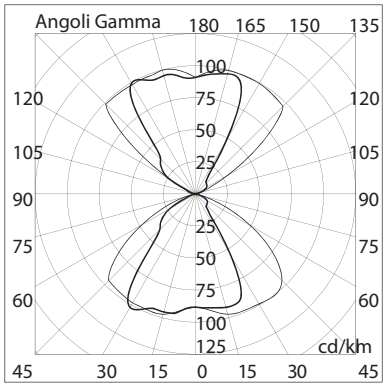

8072 14

CE CL I IP65

Domus Lighting
29-31 Richland Street Kingsgrove NSW 2208
Phone: (02) 9554 9600 | Fax: (02) 9554 9433 | Email: sales@domuslighting.com

Certified System
Quality
ISO 9001
SAI GLOBAL