BL-1073

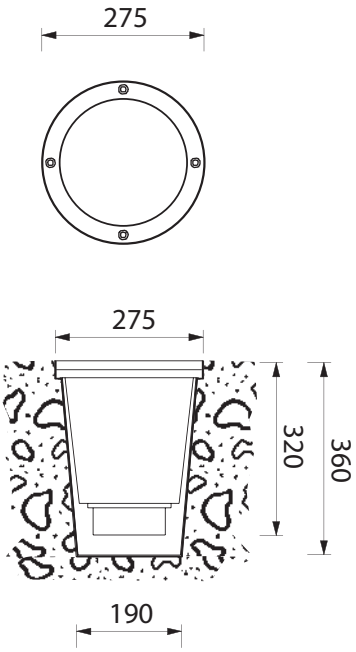

BL-1073.000
Lamp: PAR38
Power: 120W
Base: E27

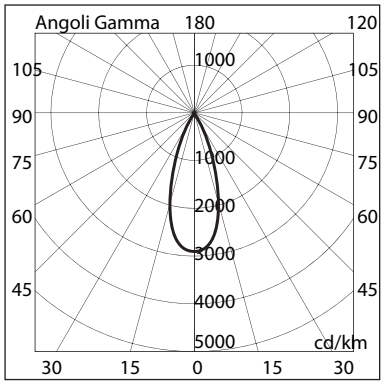

1073 00

- Outdoor recessed ground luminaire
- Painted die-cast aluminium structure
- Stainless steel AISI 316
- Die-cast aluminium diffuser grid (on request)
- Transparent glass diffuser
- Aluminium reflector
- Silicon gaskets
- Stainless steel screws
- Technopolymer holder
- Painting using high resistance to UV and corrosion polyester powders

CE | CL I | IP67 | F

Domus Lighting
29-31 Richland Street Kingsgrove NSW 2208
Phone: (02) 9554 9600 | Fax: (02) 9554 9433 | Email: sales@domuslighting.com

Certified System
Quality
ISO 9001
SAI GLOBAL