Date: December 6, 2022 12:26 pm

Blaze-Pro-100

Floodlight F&P BLK

Description

The BLAZE-PRO Series of LED Floodlights offer a sleek and stylish design, as well as an array of specialised features such as improved condensation prevention technology along with helping to reduce stock inventory. Featuring an aluminium fascia design with frosted glass lens to soften glare, IP66 rating and a unique anti-condensation breathing valve which stops unwanted condensation build-up behind the glass lens. The Multi-wattage selector switch offers the flexibility of selecting the right light output for the application within the same fitting. The tri-colour selector switch also offers the convenience of choosing between a 3000K Warm White, 4000K Neutral White or 5500K White colour temperature options. All models feature a Sensor Adaptor Interface to install the optional PIR Sensor (BLAZE-PRO-PIR). The optional sensor is a Plug-N-Play accessory that instantly converts the BLAZE-PRO floodlights into LED floodlights with sensor models. Complete with 1.5M flex and plug, as well as all angle installation bracket for ease of installation. Ideal for BBQ areas, outdoor entertaining areas, and backyard lighting. Backed by a 3 Year Replacement Warranty.

Specification Features

Input Voltage:	240V
Power:	50W/70W/100W
IP rating:	IP66
Lumens:	Warm White 3000K - 5500lm Neutral White 4000K - 7700lm White 5500K - 11000lm
LED type:	SMD
CCT:	3000K - 4000K - 5500K
CRI:	≥70
Beam angle:	120°
Dimmable:	No
Lifespan:	20,000 hrs
Driver:	DOB (driver on board)
Surge Protection:	4.5KV
Sensor:	Built-in Sensor Adaptor Interface
Cable:	1.5M flex and plug Frosted Glass Anti-Condensation Breathing Valve

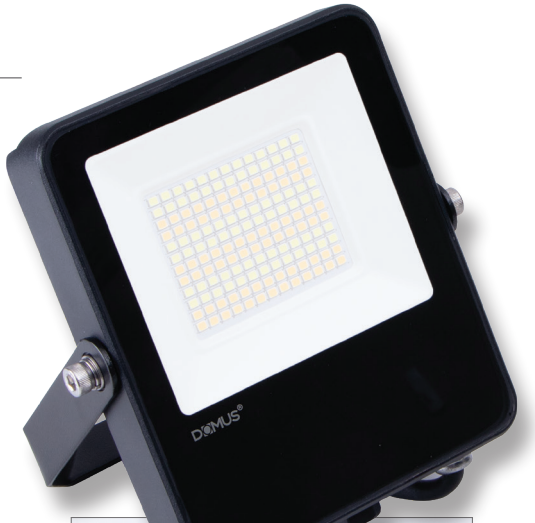

BLAZE-PRO-PIR

Diagrams / Additional

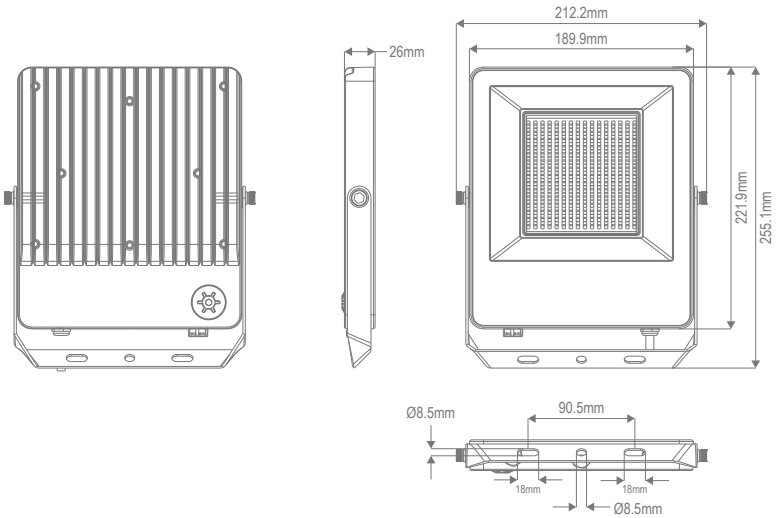

Sensor Specification Features

90° Left/Right Adjustment
180° Up/Down Adjustment
Sensor ON/OFF Control
Time Delay Settings
Sensitivity Settings
IP65

Item No.	Variant	CCT
BLAZE-PRO-100	19918	TRIO
BLAZE-PRO-PIR	19226	N/A

Domus 29-31 Richland Street. Kingsgrove NSW 2208 | Phone: (02) 9554 9600 | Fax: (02) 9554 9433 | email: enquiries@domuslighting.com.au
Specification subject to change without prior notice.