LIGHTING THAT OUTPERFORMS
SINCE 1998

ORION

ORION 13W flicker free, round fixed, semi trim less LED recessed downlight with low-glare deep baffle frame, with remote dimmable LED driver and C-BUS compatible.

PRODUCT SPECIFICATIONS

Installation	New or Retrofit
Finish	Matte Black / Matte White
Material	Aluminium
Diffuser Type	Polycarbonate
Wattage	13W
Voltage	240V AC 50Hz
Dimming	Trailing Edge/Universal
LED	COB- Built in
Colour Temp	3CCT - 3000K, 4000K, 5500K
CRI	90 + (R9: >50)
Lumen	960lm (3000K), 1110lm (4000K), 1060lm (5500K)
Beam Angle	60°
Cut-out	90mm
UGR	< 19
SDCM	≤ 3
Insulation Rating	IC-4
IP Rating	IP44
Warranty	5 Years

Cutout
Ø90mm

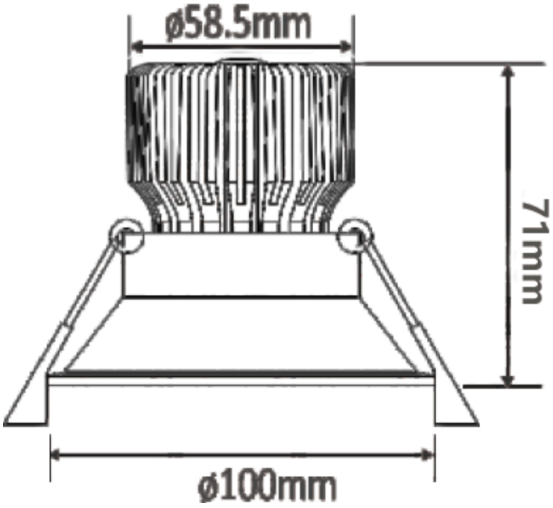

ORDERING CODES

UORION-BLK-3CCT

UORION-WH-3CCT

UGE ACCESSORIES

DESCRIPTION	MODEL NUMBER	IMAGE
LED Push Button Dimmer	UDIMMER-350	
DALI Driver	UDRIVER-DALI-300mA	

353 Settlement Rd, Thomastown VIC 3074 | sales@unitedglobal.com.au | Ph: 03 9415 7992 | www.ugelighting.com.au